µAmp - Power Supply and Amplifier Schematic

Notes
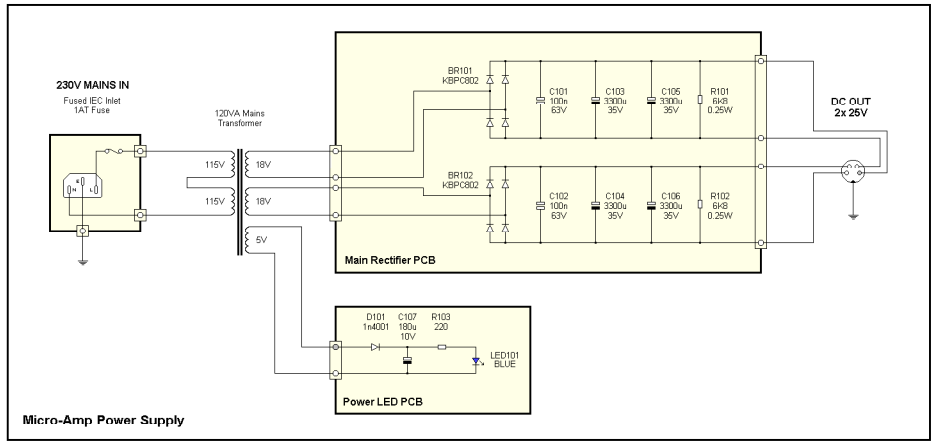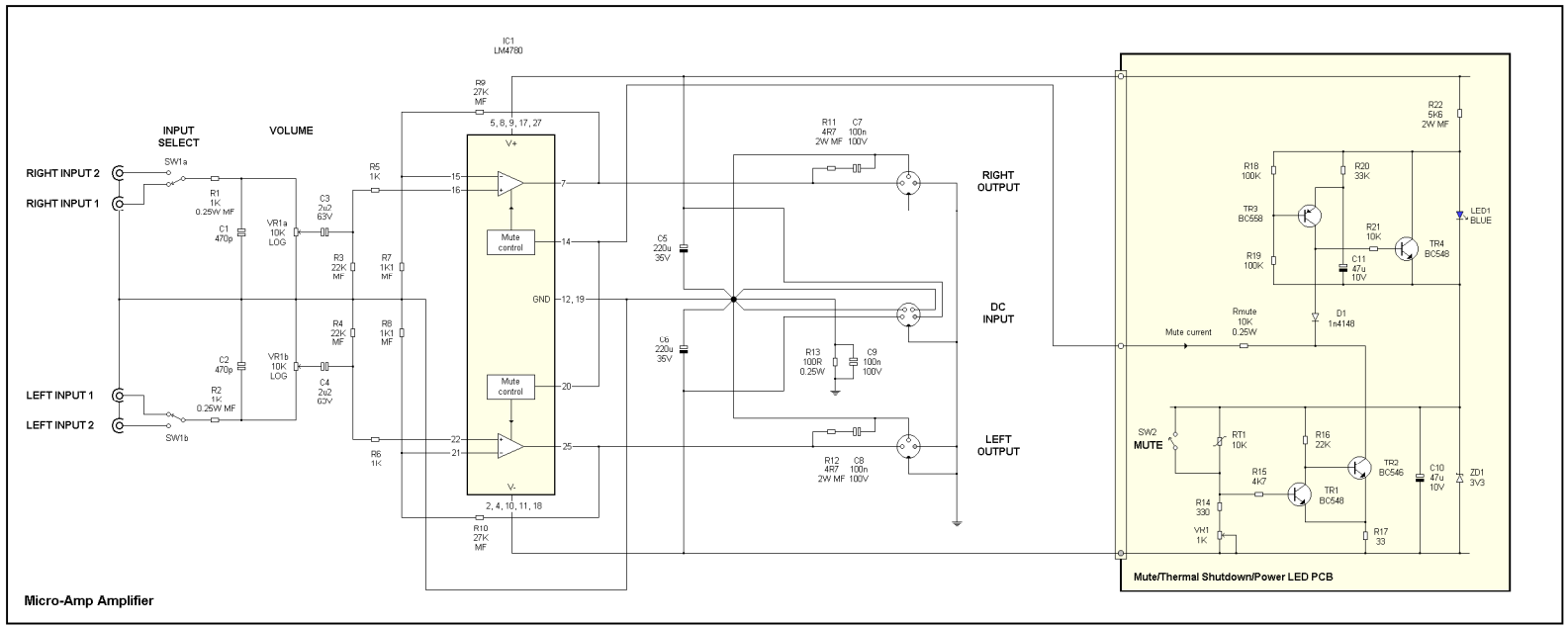
1. All Resistors are 0.125W, Carbon Film unless otherwise marked (MF = Metal Film)
2. All Electrolytic Capacitors are Panasonic FC except C10 and C11
3. Where appropriate, pin 1 is denoted as shown: